The PDF Ultrathan® piston seal profile MK is a sealing element with integrated guiding and cushioning buffers. This seal-guide element can be used both on pistons with or without a permanent magnet. When used in magnetic pistons, the seal-guide element encapsulates the permanent magnet.

- The asymmetrical retention groove ensures optimum positive connection between the sealing element and the piston.
- Cushioning buffers on the piston´s front faces with integrated ventilation ducts provide for mechanical cushioning of the cylinders.
- Multi-functional sealing element. The guiding area at the sealing element performs the guiding function in the cylinder. However, due to its geometry the sealing element is not suitable for absorption of high radial forces or long strokes.
- Multi-functional element: seal, guiding and cushioning element.
- Optimal front-side sealing effect due to favourable cushioning buffer geometry.
- Prevents metallic contact between the piston and cylinder. Ideal for light-metal and plastic cylinders (ridging).
- Long service life thanks to application-optimized compounds.
- Easier installation.
- Assembly on one-part piston is possible.
- Excellent media resistance in case of suitable compound selection.
- Low compression set.

## Range of Application

| | |
|---|---|
| Working pressure | ≤ 12 bar |
| Working temperature | -30 °C to +80 °C |
| Surface speed | ≤ 1 m/s |
| Media | Oiled as well as oil-free compressed air (after initial lubrication during assembly). |

## Compounds

Standard: P5010, PUR Compound (≈ 90 Shore A)
for low temperatures: P5075, PUR Compound (≈ 80 Shore A)
for high temperatures: V3664, FKM Compound (≈ 85 Shore A)

## Installation

The MK piston seal features easy snap-on assembly with the retention groove for 12 to 25 mm diameters being machined into the piston rod. In order to prevent damage to the sealing lips during assembly, it is necessary to break sharp edges at the piston and cylinder. Under dry operating conditions, it is imperative to apply a continuous full-surface lubricating film inside the cylinder for achieving long service life. Because the seal itself also serves as a guide, additional guidance is not required.

In case of special operating conditions (specific pressure loads, temperature, speed, use in water, HFA, HFB fluids etc.), please contact our consultancy service for a selection of the material and design best suiting your particular application requirements.

Typ 1: D < 32 mm

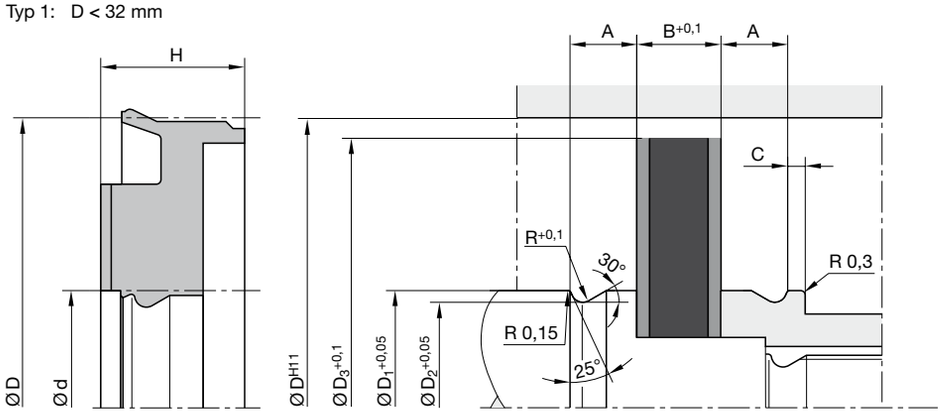


Typ 2: D ≥ 32 mm

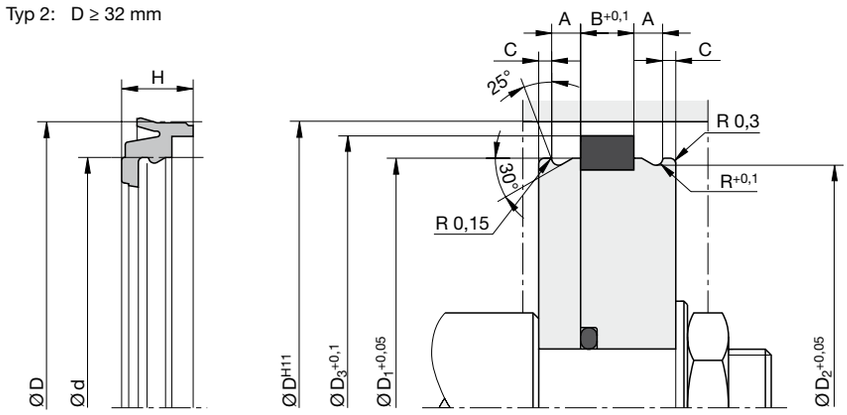


For surface finish, lead in chamfer and other installation dimensions see “General installation guidelines”.

| D | d | H | $D_1$ | $D_2$ | $D_3$ | A | B | C | R | Order code |
|---|---|---|---|---|---|---|---|---|---|---|
| **Type 1: D < 32 mm** | | | | | | | | | | |
| 12 | 6 | 5.9 | 6 | 5 | 10.4 | 2.5 | 3.65 | 0.6 | 0.5 | MK 1206 P5010 |
| 16 | 8 | 5.9 | 8 | 7 | 14.4 | 3.25 | 2.65 | 0.65 | 0.5 | MK 1608 P5010 |
| 20 | 10 | 5.9 | 10 | 9 | 18 | 2.85 | 3.65 | 0.55 | 0.5 | MK 2010 P5010 |
| 25 | 10 | 6.15 | 10 | 9 | 23 | 2.85 | 3.65 | 0.75 | 0.5 | MK 2510 P5010 |
| **Type 2: D ≥ 32 mm** | | | | | | | | | | |
| 32 | 25 | 7.15 | 25.05 | 23.8 | 29.2 | 2.3 | 4.4 | 0.9 | 0.6 | MK 3225 P5010 |
| 40 | 33 | 7.65 | 33.05 | 31.8 | 36.8 | 2.6 | 4.8 | 0.9 | 0.6 | MK 4033 P5010 |
| 50 | 43 | 7.65 | 43.05 | 41.8 | 46.9 | 2.6 | 4.8 | 0.9 | 0.6 | MK 5043 P5010 |
| 63 | 53 | 9.9 | 53.05 | 51.4 | 59.8 | 4.1 | 5.3 | 1.4 | 0.8 | MK 6353 P5010 |
| 80 | 70 | 10.9 | 70.05 | 68 | 76.8 | 3.7 | 6.1 | 1.9 | 1 | MK 8070 P5010 |
| 100 | 90 | 13.15 | 90.05 | 88 | 96.8 | 4.75 | 6 | 2.65 | 1 | MK A090 P5010 |

Further sizes on request.